Vertical Panel

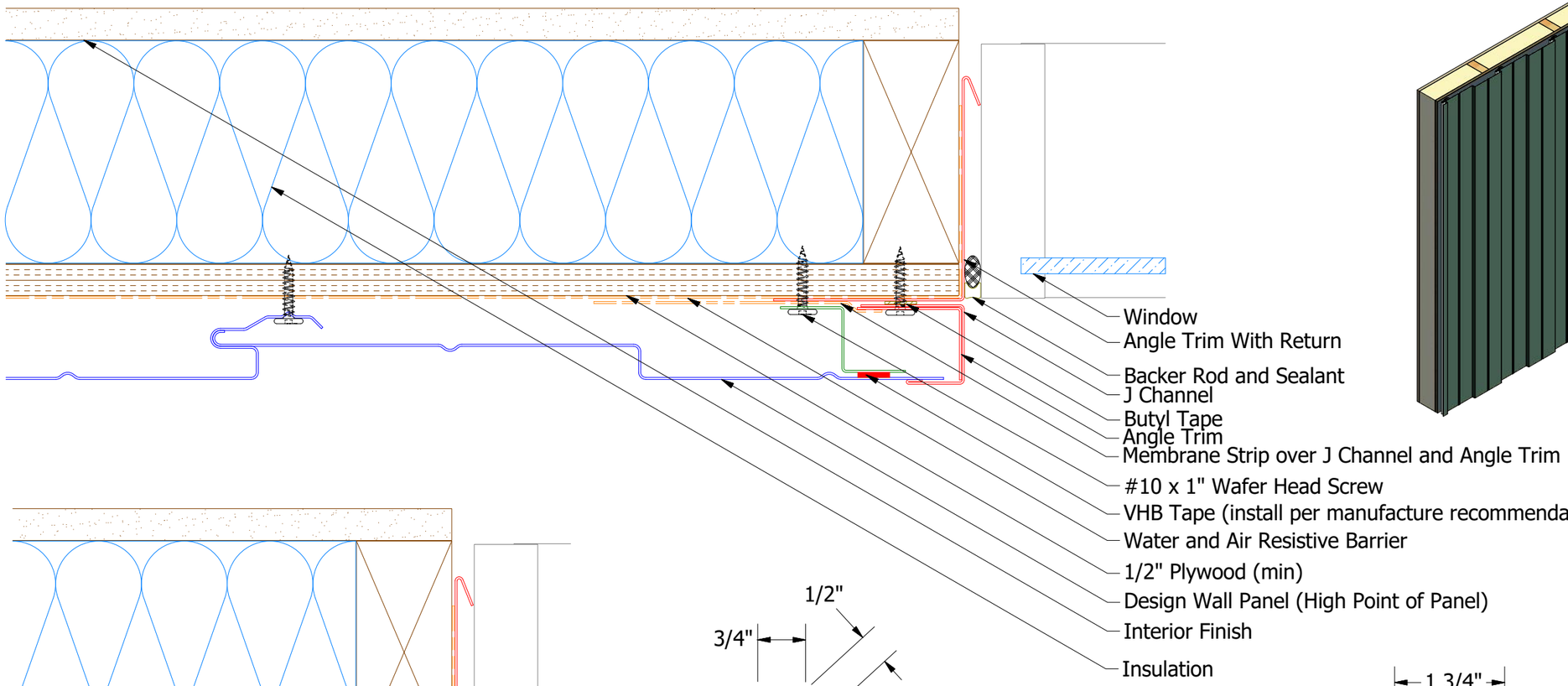

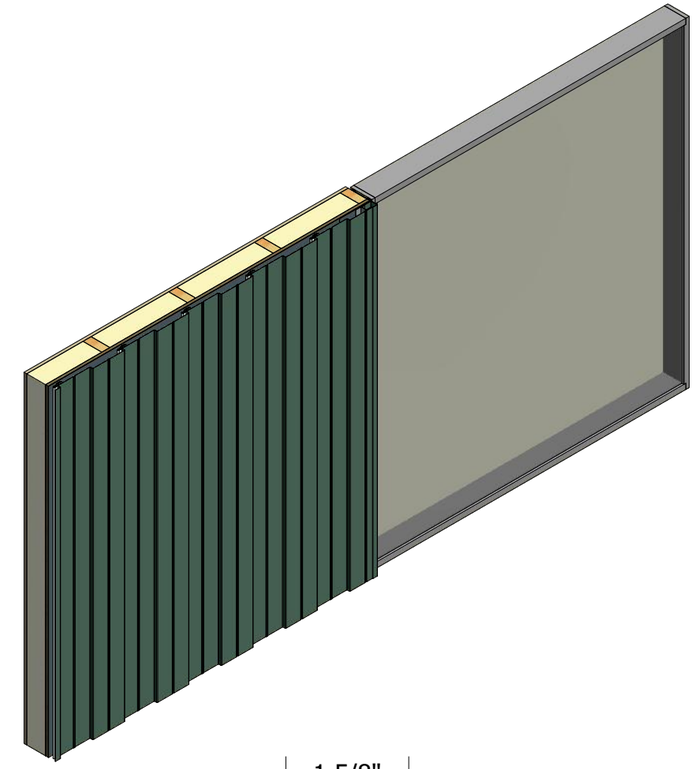

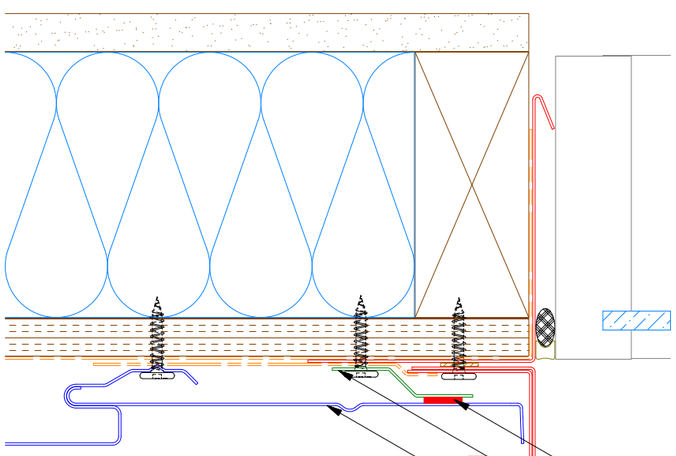

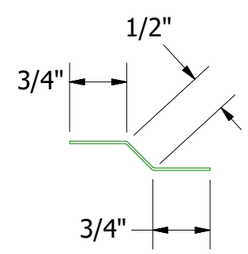

DSA975/DWA975 - Joggle Cleat

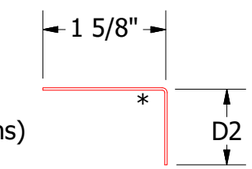

Angle Trim

DWA680: D2= 1"
DSA680: D2= 1 3/4"

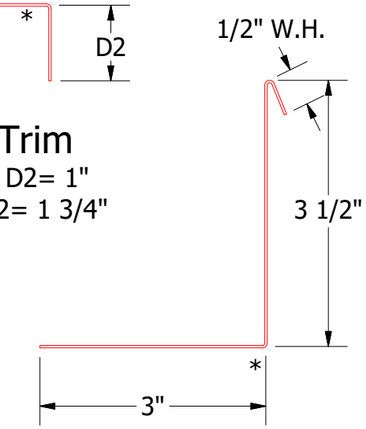

DWA683/DSA683 - Angle Trim With Return

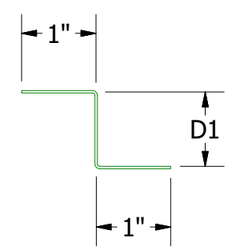

Support Z

DWA681: D3=1"
DSA681:D3=1 5/8"

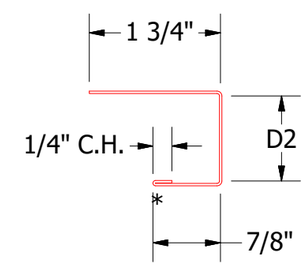

J Channel

DWA118: D1= 1 1/8"
DSA178: D1= 1 7/8"

Note: * denotes color side.
Note: stainless steel pop rivets maybe needed along with VHB tape for longer panels.

REV. NO.	DATE	DESCRIPTION OF REVISION	BY	APP
01	7/19/2021	Changed Pop Rivets to VHB Tape	DMR	

ATAS INTERNATIONAL, INC
Allentown PA
610-395-8445
Mesa AZ
480-558-7210

TITLE	Design Wall Jamb Detail		
DWG. NO.		DR DMR	DATE 6/27/2016
MATERIAL		APP DAS	DATE 7/26/16
		SH. SIZE B	SCALE X:X